TEAR SHEET

Ancram Large Empire Chandelier

Item # RL 5790NB/AI

Designer: Ralph Lauren

O/A Height: 48.5"
Fixture Height: 9.5"
Width: 34"
Canopy: 5" Round
Finishes: NB/AI
Socket: 6 - E12 Candelabra
Wattage: 6 - 5.5 LED B11
Weight: 21 Pounds

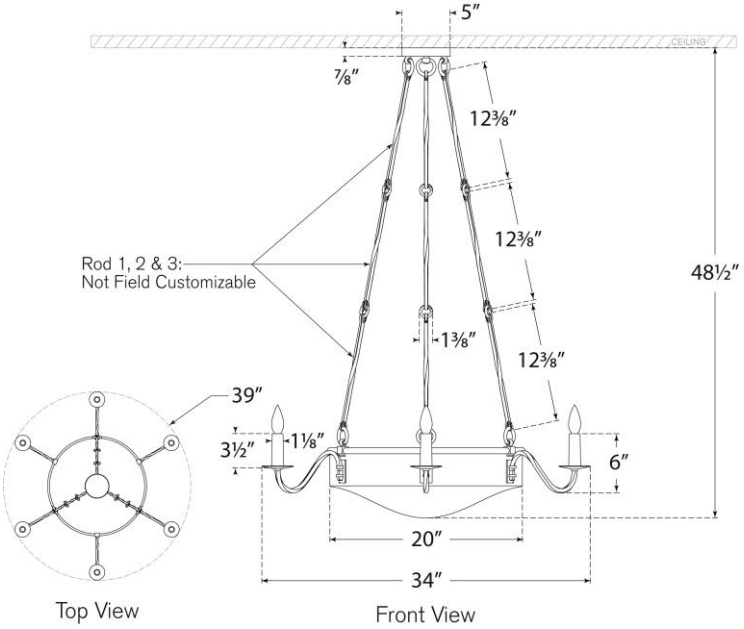

VISUAL COMFORT & CO.